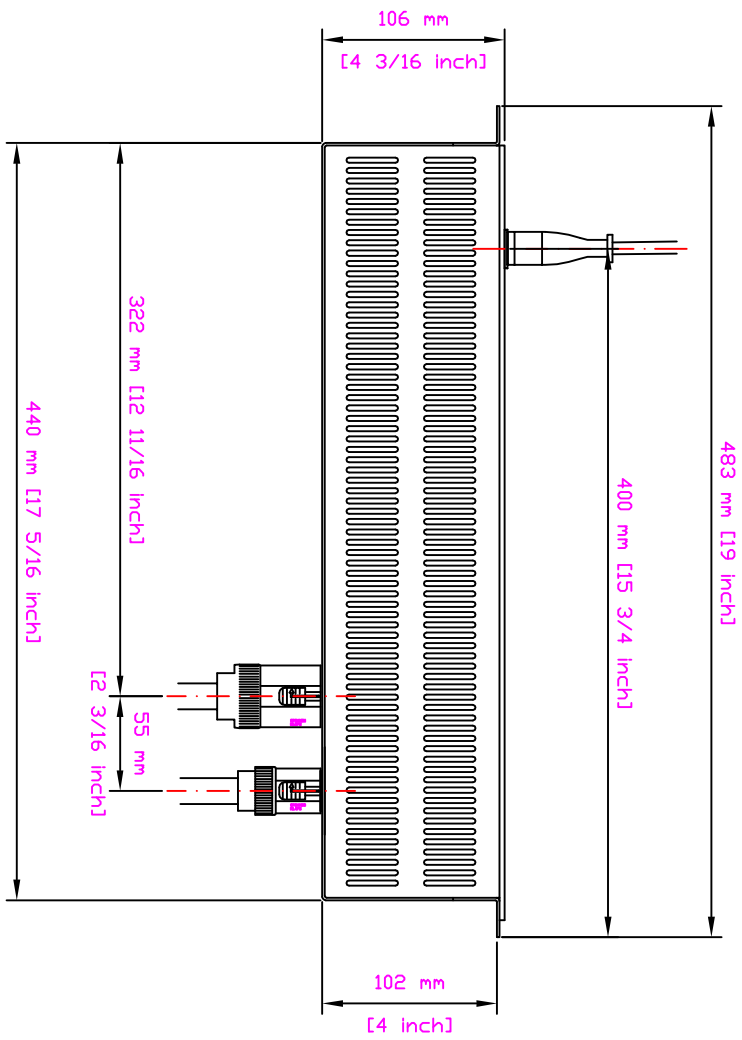

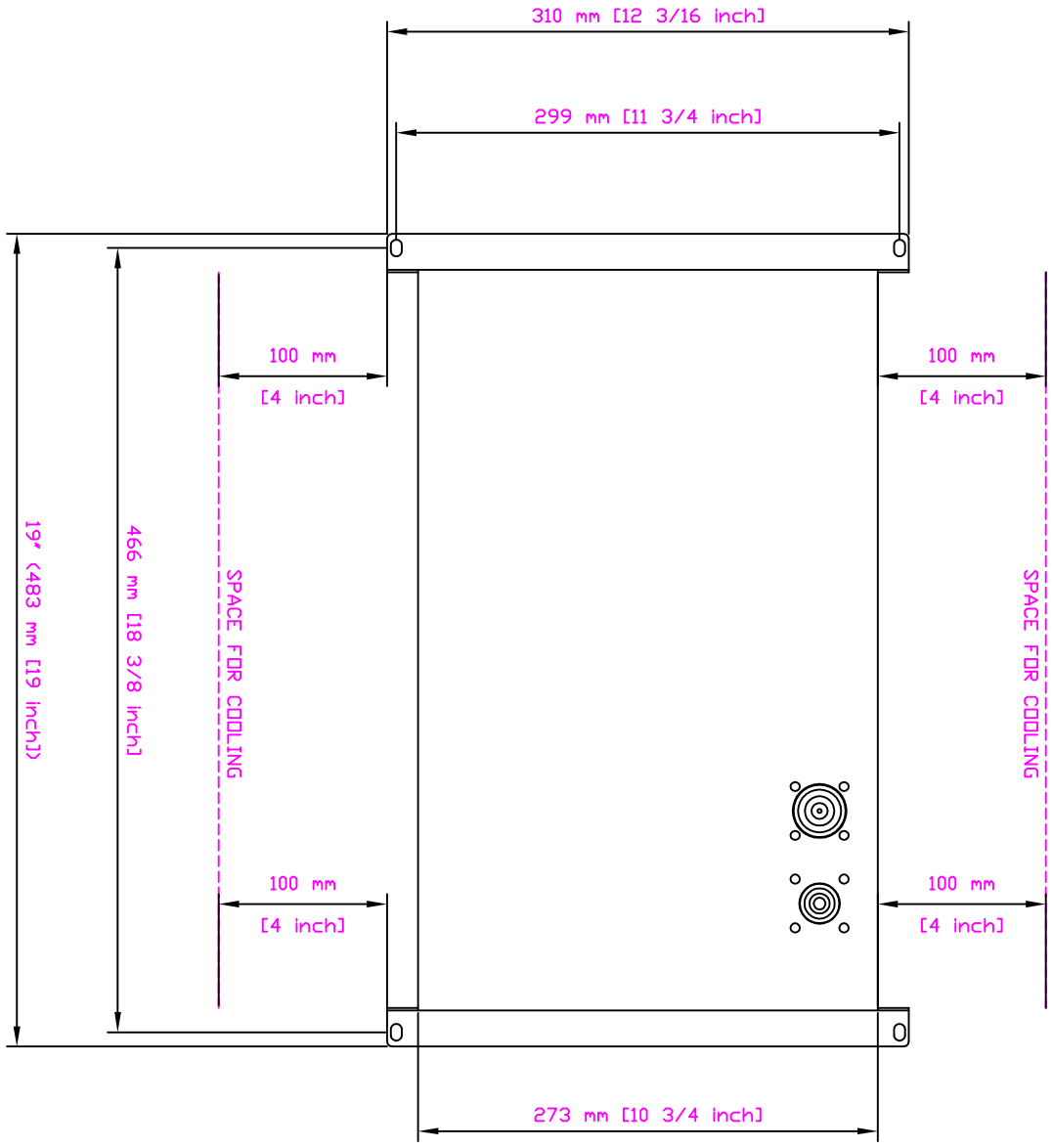

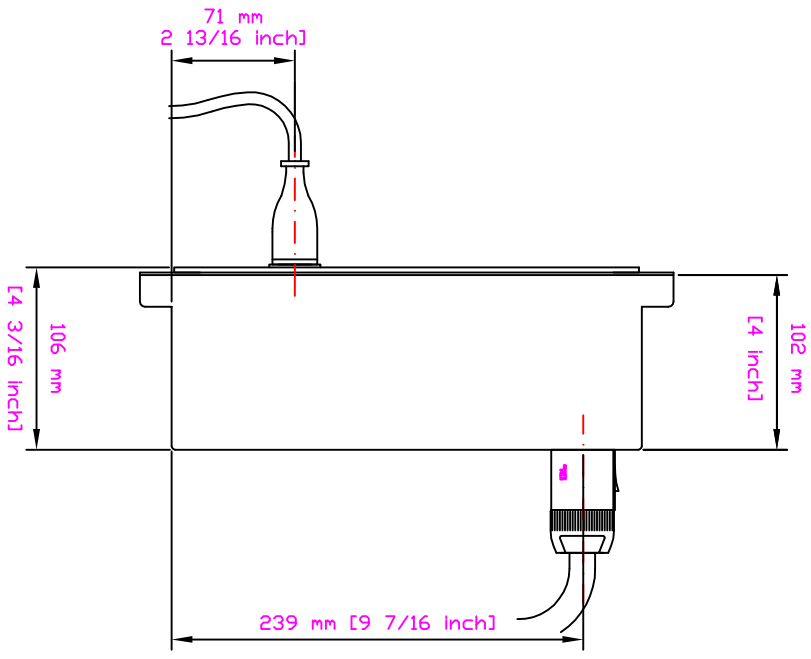
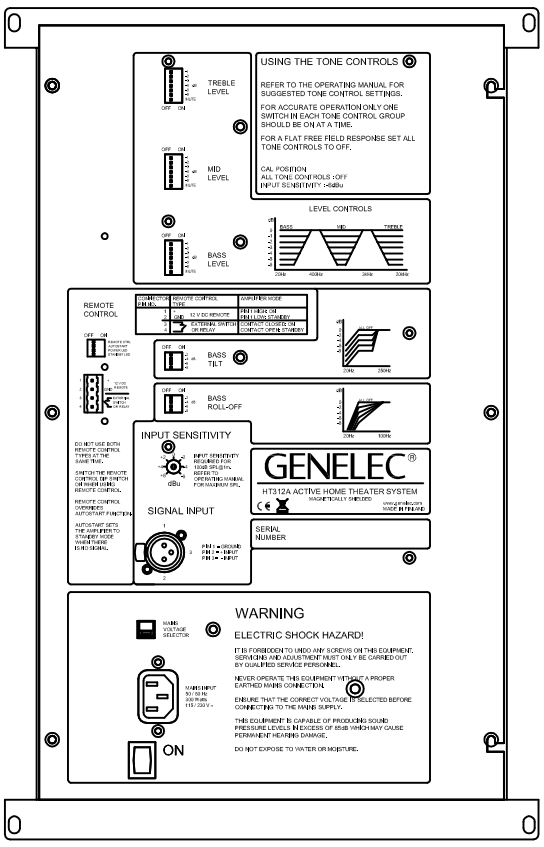
ADW312_rackviews
RACK VIEWS
14.06.06/DR